SMART Series 4MP Dual Lens PTZ Camera

TP-X2PC4A4V25C-1Y

TURING

Smart Series **TP-X2PC4A4V25C-1Y** is a Dual-Lens PTZ Camera featuring intelligent analytics on two lenses for threat detection and deterrence. The included two TV-CORE1Y license offers an enhanced experience for monitoring and detecting individuals and vehicles.

KEY FEATURES

- **Dual Lens:** 4MP on both fixed and PTZ
- **PTZ:** 25X optical zoom
- **Panoramic linkage:** VCA and PTZ control linkage
- **Active Deterrence:** Audible and light deterrence
- **Two-Way Audio:** Built-in speaker, alarm, and audio I/O.
- **Cloud Connectivity:** Connects to TURING VISION® VMS via Smart Series NVR.
- **Licenses:** Includes two TV-CORE1Y.
- **Warranty:** Up to 10-year extended (with CORE AI license).
- **Compliance:** NDAA compliant.

NDAA COMPLIANT

EMPOWER VIDEO SECURITY WITH TURING VISION ® AND CORE AI

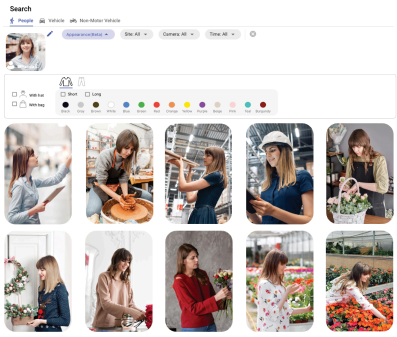

People* & vehicle attribute search

License plate detection and comparison

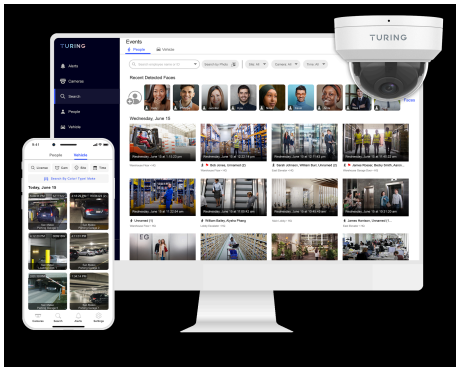

Customized smart alerts anywhere using Vision apps

*Activation depends on state regulations and the compliance with Biometric Information Protection Act (BIPA). Please refer to our privacy policy.

Visit turing.ai/get-core to find out more about CORE AI

SPECIFICATIONS

MODEL NUMBER	TP-X2PC4A4V25C-1Y	
TURING VISION ® SUPPORT		
TURING VISION ® Cloud VMS	Included	
CORE AI License	Includes TV-CORE1Y x 2; extensions and add-ons license option are available	
Prerequisites	Turing SMART Series NVR & bridge	
VIDEO & AUDIO		
Channel	**4mm lens**	**25x PTZ**
Image Sensor	1/1.8” 4MP 16:9 progressive scan, CMOS	1/2.7” 4MP 16:9 progressive scan, CMOS
Lens	**Focal Length:** 4mm @F1.0; **Angle of view:** HFOV:94.9°; VFOV:51.5°; DFOV:112.3°	**Focal Length:** 4.8-120mm @F1.5-F3.8; **Angle of view:** HFOV:55.46° ~ 3.09°; VFOV:32.94° ~ 1.73°; DFOV:68.22° ~ 3.65°
Minimum Illumination	Color: 0.0005 lux (F1.0, AGC ON)	Color: 0.003 lux (F1.5, AGC ON)
LED	White light: range up to 30m (98.4ft)	IR: range up to 100m (328.1ft); 850nm wavelength
Shutter	Auto/Manual, shutter time: 1~1/100000 s	
Image Processing	**WDR:** 120 dB; **S/N:** >56dB; **Noise reduction**: 2D/3D; **Defog**: Digital Defog	
Video Encoding	Ultra 265, H.265, H.264 (Baseline profile, Main Profile, High Profile), MJPEG; **ROI**: Up to 8 areas	
Available Resolution and Frame Rate	**Main Stream:** Up to 4MP(2688x1520) ,Max 30fps **Sub Stream:** Up to 1080P (1920x1080), Max 30fps **Third Stream:** Up to D1 (720x576), Max 30fps	**Main Stream:** Up to 4MP(2688x1520) ,Max 30fps **Sub Stream:** Up to 720P (1280x720), Max 30fps **Third Stream:** Up to D1 (720x576), Max 30fps
On-screen Overlay	**OSD**: Up to 8 OSD; **Privacy Mask**: Up to 8 areas	
White Balance	Auto/Outdoor/Fine Tune/Sodium Lamp/Locked/Auto2	
Image Rotation	Normal; Flip Vertical; Flip Horizontal; 180°; 90°Clockwise; 90°Anti-clockwise	
Alarm I/O	2/1	
Audio	Built-in speaker, 1 Input: impedance 1 kΩ, amplitude 2.5 V [p-p], 1 Output: impedance 600 Ω, amplitude 2 V [p-p]	
Onboard Storage	microSD slot (SD card not included); up to 512 GB	
PTZ Control		
Pan and Tilt	Pan: n/a; Tilt: 18° ± 5°(manual)	Pan: 360°, 0.1°/s ~ 80°/s; Tilt: –15° ~ 90°, 0.1°/s ~ 80°/s
Preset and Patrol	N/A	1024 Presets, 16 preset, route & recorded patrols
Tracking	Panoramic linkage (PTZ tracking base on fixed lens detection)	Auto tracking, Event linkage tracking
Event Handling		
DORI	**Detect**:295.3ft; **Observe**:118.1ft; **Recognize**:59.1ft; **Identify**: 25.9ft	**Detect**:406~8120.1ft; **Observe**:162.4~3248.0ft; **Recognize**:81.2~1624.0ft; **Identify**: 40.6~812.0ft
Event Type	**Basic**: motion detection, tampering alarm, audio detection; **Intelligent**: Cross line detection, intrusion detection, enter area detection;	
NETWORK ACCESSIBILITY & SECURITY		
Protocols	SSH, IGMP, RTP, RTCP, SMTP, IPv4, IPv6, ICMP, ARP, TCP, UDP, DHCP, PPPoE, RTSP, RTMP, DNS, DDNS, NTP, FTP, UPnP, HTTP, HTTPS, 802.1x, SNMP, QoS, SSL/TLS	
Compatible Integration	ONVIF (Profile S, Profile G, Profile T, Profile M), API,SDK	
User/Host	Up to 32 users. 3 user levels: administrator and common user	
Security	TLS 1.3, Password Protection, Strong Password, HTTPS Encryption, Export Operation Logs, Basic and Digest Authentication for RTSP, Digest Authentication for HTTP, TLS 1.2, WSSE and Digest Authentication for ONVIF	
Network	1 RJ45 10M/100M Base-TX Auto-adaptive Ethernet	
GENERAL		
EMC	CE-EMC (EN 55032: 2015+A1: 2020, EN 61000-3-3: 2013+A1: 2019, EN IEC 61000-3-2: 2019+A1: 2021, EN 55035: 2017+A11: 2020) FCC (FCC CFR 47 part15 B, ANSI C63.4-2014)	
Safety Certification	CE LVD (EN 62368-1: 2014+A11: 2017) UL (UL 62368-1, 2nd Ed , Issue Date: 2014-12-01)	
Power	DC 12V±25%; PoE (IEEE **802.3at**); Max. 24W; Surge Protection: 4KV	
Dimensions & Weight	304 x 195 x 163mm (12.0" x 7.7" x 6.4") (L x W x H), 2.27kg (5.00lb)	
Working Environment	-40 ℃ to 65 ℃ (-40 ℉ to 149 ℉), Humidity: ≤ 95% RH (non-condensing)	
Storage Environment	-40 ℃ to 70 ℃ (-40 ℉ to 158 ℉), Humidity: ≤ 95% RH (non-condensing)	
Reset Button	Yes	

Environmental Protection	Ingression protection: IP66; Vandal resistance; CE-RoHS (2011/65/EU; (EU) 2015/863)

**All specifications are subject to change without further notice

ORDERING INFORMATION

MODEL NUMBER	Bundled CORE AI	CORE AI License Add-On
TP-X2PC4A4V25C-1Y	TV-CORE1Y 1-Year License x 2	TV-CORE1Y/3Y/5Y; TV-UPG2Y/4Y/9Y

Dimensions

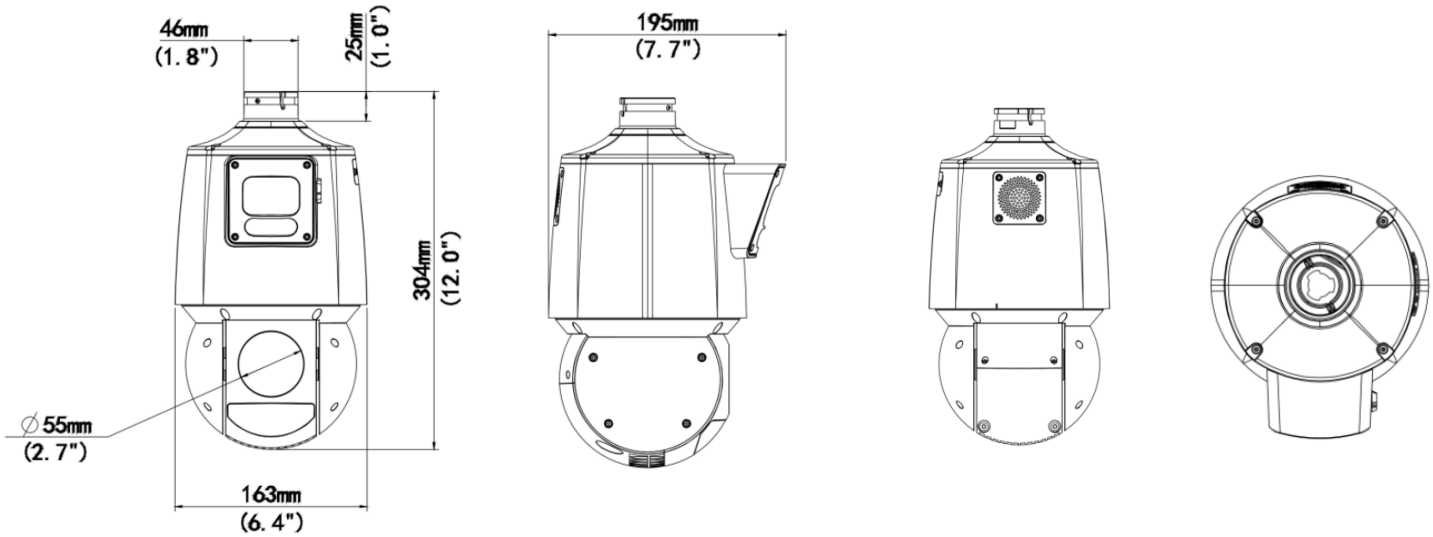

MOUNTING ACCESSORIES

MODEL NUMBER	DESCRIPTION / APPLICATION	COMPATIBLE ACCESSORIES
TP-PCWM	PTZ Wall mount	**TP-PCCM** - PTZ corner mount **TP-PCPLM** - PTZ pole mount
TP-PCJB	PTZ Junction Box	**TP-PCCM** - PTZ corner mount **TP-PCPLM** - PTZ pole mount
TP-PCPDMB	PTZ Pendant Base 200mm	**TP-PCPDM5** - PTZ pendant extension 500mm
TP-PCCM	PTZ Corner Mount	
TP-PCPLM	PTZ Pole Mount	
TP-PCPRM	PTZ Parapet Mount	